4. Disassembly and Reassembly

Note: *Make sure power is OFF, and unplug the power cord from the wall outlet.*

4-1 Tx Guide

- Open the operating panel assembly.
- Carefully lift up the TX guide as shown by the figure.

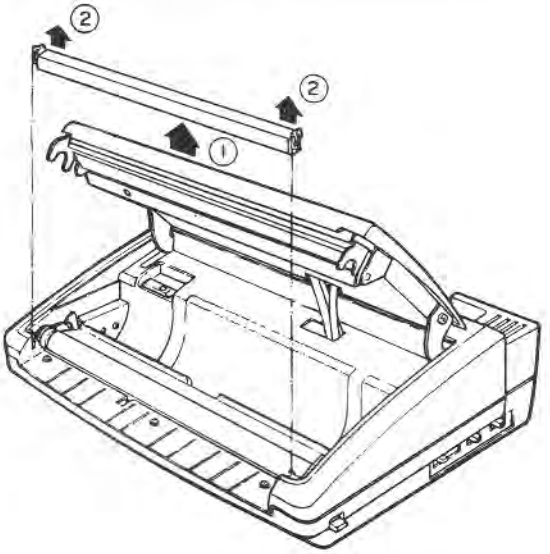

Figure 4-1

4-2 Top Cover

- Loosen the screws fastening the top cover (5 screws).
- Carefully lift up the top cover.
- Remove the harness from the base as shown by the figure.

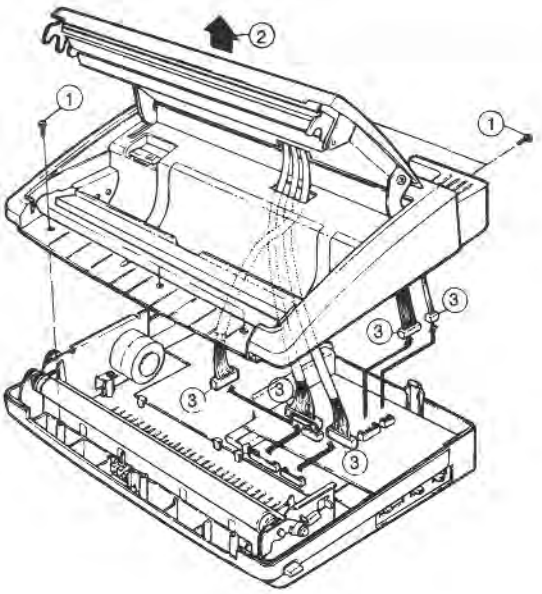

Figure 4-2

4-3. OPE Unit

- Loosen the screws fastening the top cover (2 screws).
- Carefully lift up the OPE assembly as shown by the arrow.

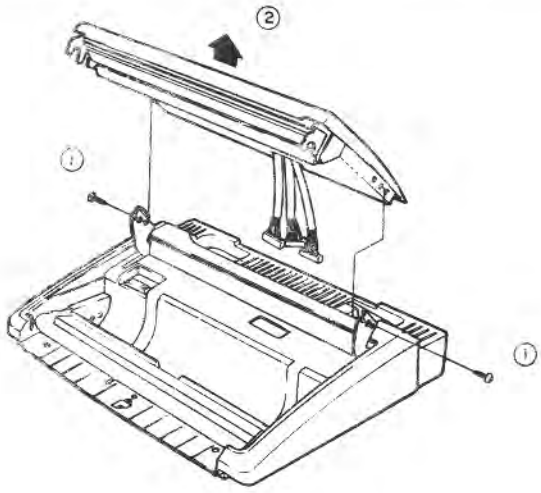

Figure 4-3

4-4. OPE Cover

- Loosen the screws fastening the OPE chassis (2 screws).
- Remove the paper empty sensor connector from the OPE board.
- Remove the OPE unit from the OPE chassis as shown by the arrows.

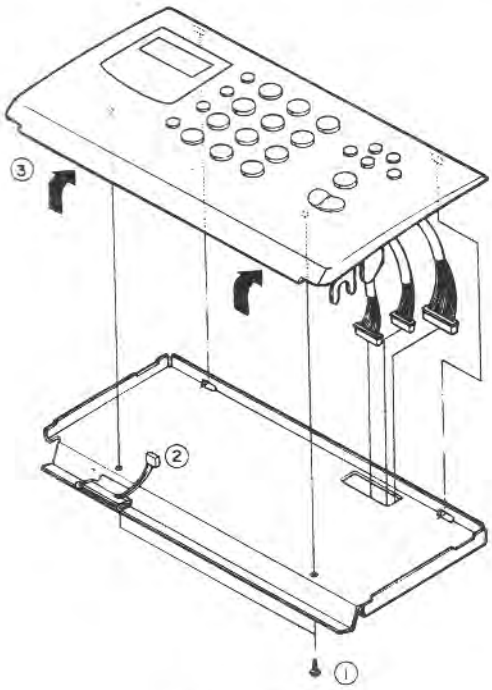

Figure 4-4

4-5. TPH

- Remove the TPH assembly from the OPE unit.
- Remove the TPH from the TPH assembly.
- Remove the TPH harness from the TPH connector.
- Remove the TPH guide from the TPH.

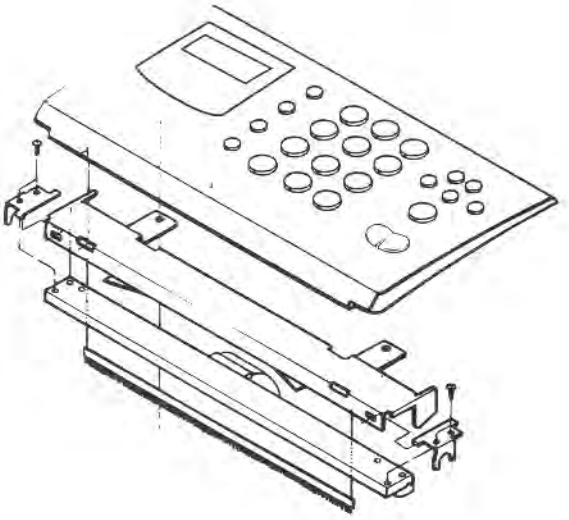

Figure 4-5

4-6. Main Frame

- Lift up the white roller assembly.
- Loosen the E-rings fastening the main chassis assembly (2 E-rings)
- Remove the spring-locker.
- Loosen the screws fastening the main chassis assembly (2 screws).
- Lift up the CIS assembly.
- Remove the document guide from the CIS assembly (2 screws).
- Remove the CIS guide from the CIS (2 screws).

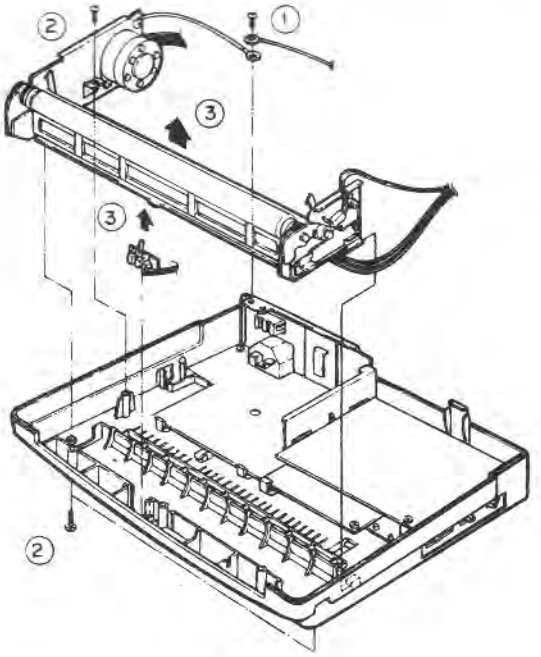

Figure 4-6

4-7. CIS

- Lift up the white roller assembly.
- Loosen the E-rings fastening the main chassis assembly (2 E-rings)
- Remove the spring-locker.
- Loosen the screws fastening the main chassis assembly (2 screws).
- Lift up the CIS assembly.
- Remove the document guide from the CIS assembly (2 screws).
- Remove the CIS guide from the CIS (2 screws).

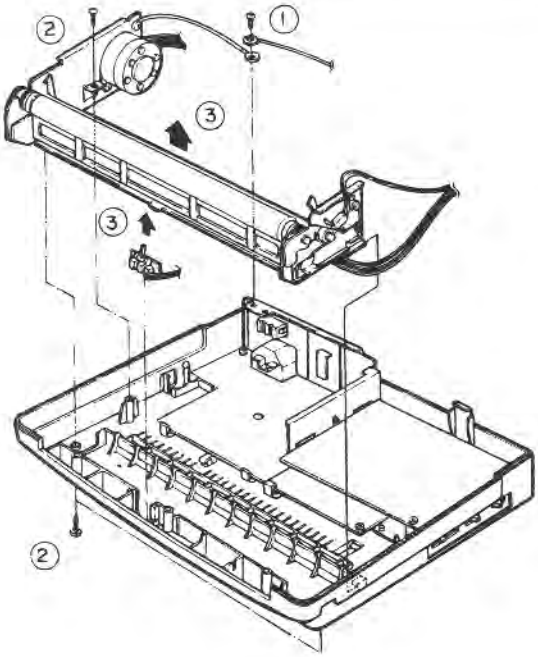

Figure 4-7

4-8. BOARDS & POWER SUPPLY

- Remove the handset modular harness from the LIU board.
- Loosen the screw fastening the LIU board and carefully lift up the LIU board as shown by the arrow.
- Loosen the screws fastening the main board and the daughter board (3 screws). Lift up the rear bracket.
- Loosen the screw fastening the base and the daughter board (1 screw). Lift up the daughter board.
- Loosen the screws fastening the power supply and the base (2 screws). Lift up the power supply and the main board to remove them.
- Lift up the modular jack and the earth spring.

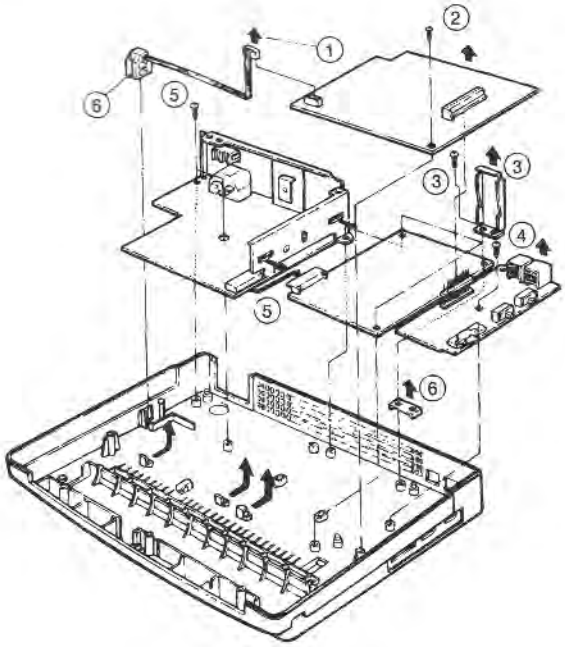

Figure 4-7